本公司智慧财产未经许可不得复制
ming biao copyright,may not be used without permission from ming biao.

S type

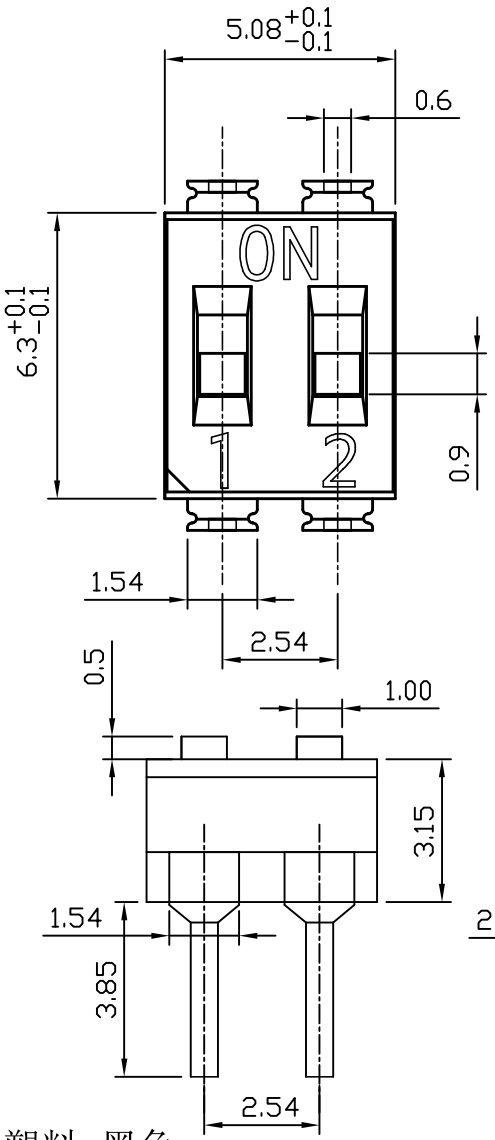

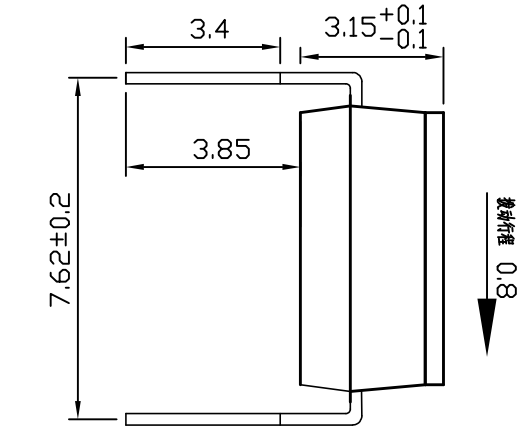

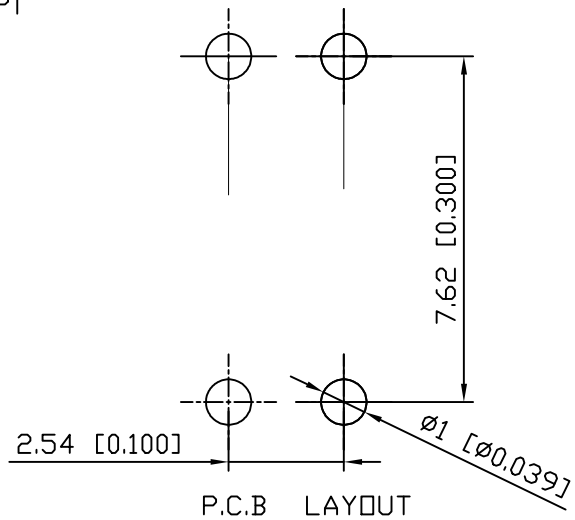

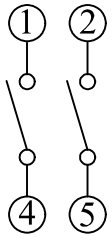

CIRCUIT

SPECIFICATIONS:

Operating temperature range:-30℃to+85℃
Rating:100mA.50V DC Max
Insulation resistance:100MΩ min.500V DC
Dielectric strength:500V AC for 1Min
Contact resistance:50mΩ Max
Life:1000 Cycles
Travel:0.8mm
Operating force:80gf

材料
1. 底座:工程塑料,黑色
2. 上盖:工程塑料,黑色
3. 推钮:工程塑料,白色
4. 端子:合金铜镀金

MING BIAO 铭标 2024.09.28 ISSUED R&D DEPT

RoHS COMPLIANT Pb Pb-Free Halogen Free

东莞市铭标电子科技有限公司
Ming Biao Electronic Technology Co. ,Ltd.

TOLERANCE				DESIGN	DATE	TITLE	平拨式DIP开关
UNLESS OTHERWISE STATED				wyj	2024. 09. 28		
X.X	±0.20	SIZE	A4	CHKD	DATE	MODEL	DHT60-DTH-02
X.XX	±0.15	REV	A				
X.XXX	±0.10	UNIT	mm	APPD	DATE	SHEET	1/3
∡	±2°	SCALE	2:1			PRINT DATE	2025.03.26